12103-10

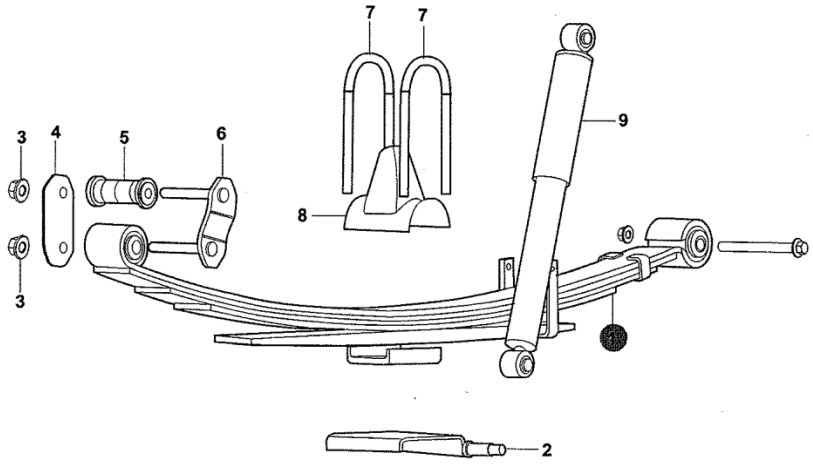

12103-10 LEAF SPRING ASSY			
1	M201045-0100	LEAF SPRING ASSY	2
2	M201045-0200	PLATE, SADDLE, LH	1
2	M201045-0201	PLATE, SADDLE, RH	1
3	Y043-150	NUT	1
4	F202045-0700	JIONT PLATE, INNER	2
5	F202045-0900	JIONT PLATE, OUTER	2
6	F202045-0800	BUSH, RR SUSPENSION	4
7	R101045-0400	U-BOLT, RR LEAF SPRING	4
8	R101045-0300	CUSHION, RR SPRING	2
9	M201045-1600	ABSORBER ASSY, RR SHOCK	2

2013-05